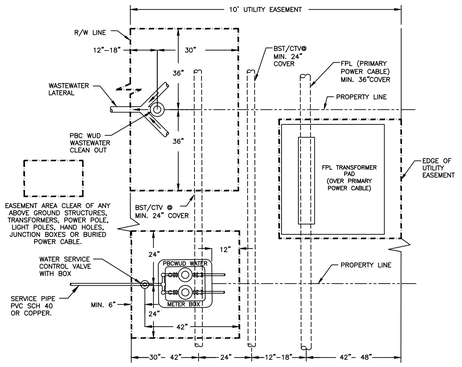

PLAN (N.T.S.)

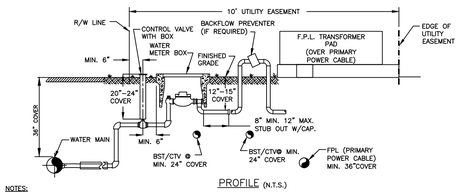

PROFILE (N.T.S.)

NOTES:

1. THE DETAIL WAS DEVELOPED IN COLLABORATION WITH UTILITY COMPANIES SUPPLYING VARIOUS UTILITY SERVICES TO P.B.C.W.U.D. CUSTOMERS.
2. THE DIMENSIONS SHOWN SHALL SERVE AS A GENERAL GUIDELINE TO INSTALL UTILITIES WITHIN A 10' WIDE UTILITY EASEMENT PARALLELING A RIGHT-OF-WAY.
3. THE PARTICIPATING UTILITIES PLEDGE TO OBSERVE, FOLLOW, AND ENFORCE THE INSTALLATION PARAMETERS SHOWN ON THIS DETAIL.

TYPICAL UTILITY INSTALLATION DETAIL IN A 10' UTILITY EASEMENT ADJACENT TO R/W

11W

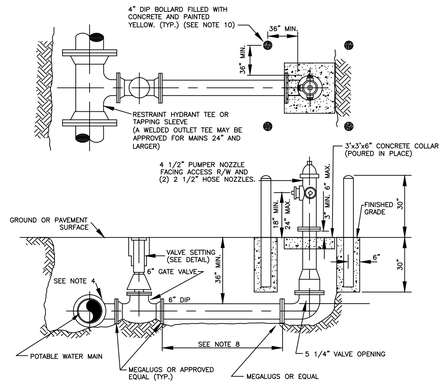

NOTES:

1. HYDRANT SHALL BE INSTALLED PLUMB AND TRUE IN UNOBSTRUCTED LOCATION AND SHALL NOT INTERFERE WITH PEDESTRIAN WALKWAYS, BIKEPATHS, ETC. (MIN. 7.5' FEET CLEARANCE ON ALL SIDES).
2. THE SAME MODEL HYDRANT SHALL BE USED THROUGHOUT CURRENT CONTRACT PHASE. HYDRANTS MUST BE ORDERED RED IN COLOR, WITH FINISHED EPOXY COAT APPLIED BY THE HYDRANT MANUFACTURER. HYDRANT SHALL BE FACTORY EQUIPPED WITH PLUGGED DRAIN HOLES.
3. VALVE SHALL BE PLACED ADJACENT TO MAIN AND RESTRAINED WITH MEGALUGS OR EQUAL.
4. HYDRANT TEES ARE PREFERRED.
5. ALL HYDRANTS SHALL BE TEE'D OFF OF MAINS
6. HYDRANTS SHALL NOT BE PLACED IN SIDEWALKS, ROADWAYS, OR BIKEPATHS.
7. FIRE HYDRANT SHALL BE LOCATED 5' MIN. FROM EDGE OF PAVEMENT WITH RAISED CURBING.
8. ON RUNS LONGER THAN 60 FEET ANOTHER VALVE IS REQUIRED LESS THAN ONE PIPE JOINT OF THE HYDRANT.
9. PAINT SAFETY RED, IF REQUIRED, WITH APPROVED PAINT.
10. BOLLARDS MAY BE REQUIRED FOR HYDRANTS WITH LESS THAN 7 FEET TO EDGE OF PAVEMENT (WITHOUT RAISED CURBING). NO BOLLARDS SHALL BE INSTALLED IN COUNTY RIGHT-OF-WAY "CLEAR ZONE".
11. BURIED HYDRANT HARDWARE SHALL BE STAINLESS STEEL (TYPE 304L OR TYPE 304 BOLTS/TYPE 304 NUTS).
12. NO CONNECTION (TEE, TAP) IS ALLOWED BETWEEN THE HYDRANT CONTROL VALVE AND THE FIRE HYDRANT.
13. APPROVED SECURITY CAPS WITH CHAINS ARE REQUIRED FOR ALL NOZZLES.

TYPICAL FIRE HYDRANT INSTALLATION WITH BOLLARDS DETAIL

12W

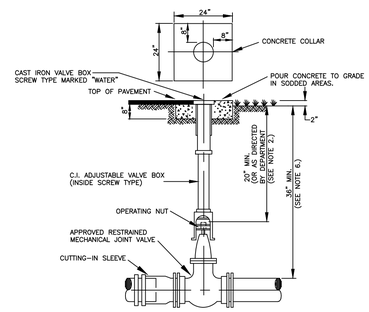

NOTES:

1. CONCRETE COLLAR IS NOT REQUIRED IN PAVED AREAS IF PAVEMENT SURFACE IS FINISHED PRIOR TO CONDITIONAL FINAL INSPECTION.
2. WHEN OPERATING NUT IS DEEPER THAN 36" A ONE PIECE EXTENSION WILL BE REQUIRED TO BRING OPERATING NUT 20"–30" BELOW FINISHED GRADE. EXTENSION BOLTS & NUTS ARE TO BE STAINLESS STEEL. A HIGH STRENGTH STEEL CENTERING PLATE, WELDED TO THE EXTENSION, IS ALSO REQUIRED.
3. VALVE BOXES SHALL HAVE COVERS MARKED "WATER".
4. VALVE BOX EXTENSION TO BE D.I.P. OR C-900 PVC SDR 18 (BLUE)
5. A CUT-IN INSTALLATION SHALL REQUIRE MEGALUGS OR EQUAL THROUGHOUT ASSEMBLY.
6. IN ORDER TO MAINTAIN ADEQUATE COVER OVER VALVE NUT, THE FOLLOWING MINIMUM COVERS OVER PIPE ARE REQUIRED

GATE VALVE SIZE	MIN. COVER OVER PIPE
16"	48"
20"	54"
24"	60"
30"	72"
36"	84"

7. VALVES IN ROADWAYS SHALL BE LOCATED OUTSIDE OF WHEEL PATHS WHENEVER POSSIBLE.

POTABLE WATER MAIN TYPICAL GATE VALVE SETTING AND MAIN CUT-IN DETAIL

13W

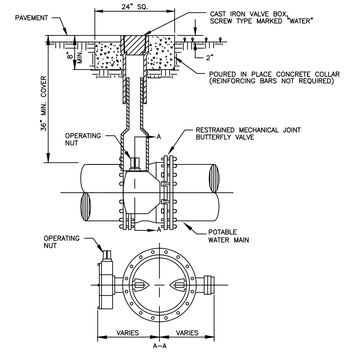

NOTES:

1. CONCRETE COLLAR IS NOT REQUIRED IN PAVED AREAS IF PAVEMENT SURFACE IS FINISHED PRIOR TO CONDITIONAL FINAL INSPECTION.
2. WHEN TOP OF OPERATING NUT IS DEEPER THAN 42" AN EXTENSION WILL BE REQUIRED TO BRING OPERATING NUT 24"–30" BELOW FINISHED GRADE. EXTENSION BOLTS & NUTS ARE TO BE STAINLESS STEEL. A HIGH STRENGTH STEEL CENTERING PLATE, WELDED TO THE EXTENSION, IS ALSO REQUIRED.
3. VALVE BOXES SHALL HAVE COVERS MARKED "WATER".
4. A CUT-IN INSTALLATION SHALL REQUIRE MEGALUGS OR EQUAL THROUGHOUT ASSEMBLY.
5. EXTENSION VALVE BOX TO BE D.I.P. OR C-900 PVC DR 18 (COLOR: BLUE)
6. VALVES IN ROADWAYS SHALL BE LOCATED OUTSIDE OF WHEEL PATHS WHENEVER POSSIBLE.

POTABLE WATER MAIN TYPICAL BUTTERFLY VALVE SETTING

14W

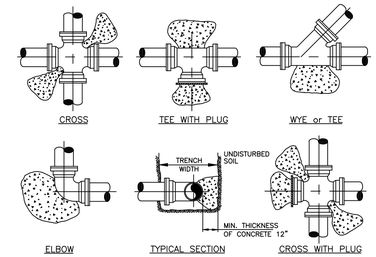

PIPE	THRUST BLOCK AREA REQ'D	REMARKS	NOTE: FOR OTHER FITTINGS USE THE FOLLOWING FACTORS.
4"	2.0 SQ. FT.	VALUES ARE FOR 90° BEND, BASED ON 2000 P.S.F. SAFE BEARING LOAD AND PIPE PRESSURE OF 150 P.S.I. FOR OTHER SOILS & PRESSURES THE AREA REQUIRED IS IN DIRECT PROPORTION	TEE 100% 45° BEND 71% 22 1/2° BEND 39% 11 1/4° BEND 20% DEAD END 100%
6"	4.0 SQ. FT.		
8"	6.6 SQ. FT.		
10"	10.0 SQ. FT.		
12"	14.0 SQ. FT.		
14"	18.6 SQ. FT.		

NOTES:

1. CONCRETE THRUST BLOCKS OR THRUST COLLARS MAY BE UTILIZED ONLY IF NECESSARY FOR CONNECTIONS TO AN EXISTING PIPING SYSTEM, OTHERWISE MECHANICAL RESTRAINTS SHALL BE USED. KEEP "T" BOLTS CLEAR OF CONCRETE, WRAPPED IN VISQUEEN FOR FUTURE ACCESS, WITH A MINIMUM OF 1" THICKNESS BETWEEN THE FITTING AND SOIL.
2. BEFORE POURING CONCRETE, PLUGS SHALL BE WRAPPED WITH VISQUEEN AND A BOARD PLACED IN FRONT.
3. CONCRETE SHALL BE 2500 P.S.I. MINIMUM.
4. THE ENGINEER OF RECORD SHALL SUBMIT A THRUST BLOCK SIZE CALCULATION FOR TEE CONNECTIONS INTO UNRESTRAINED EXISTING MAINS LARGER THAN 14".
5. THE ENGINEER OF RECORD SHALL SUBMIT A PIPE RESTRAINT DESIGN FOR INLINE EXTENSIONS OF A EXISTING UNRESTRAINED MAIN IF MECHANICAL JOINT RESTRAINT CAN NOT BE INSTALLED ON THE EXISTING MAIN.

TYPICAL THRUST BLOCKS FOR PRESSURE PIPE

20W

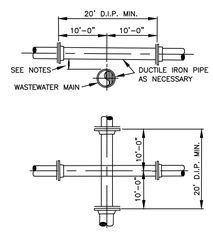

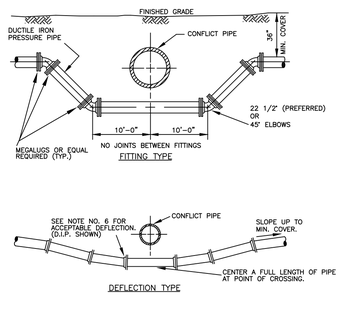

NOTES:

1. STORM SEWER, GRAVITY WASTEWATER AND RECLAIMED WATER MAIN CROSSING UNDER POTABLE WATER MAINS SHALL BE LAID TO PROVIDE A MINIMUM VERTICAL DISTANCE OF TWELVE (12) INCHES BETWEEN THE INVERT OF THE UPPER PIPE AND THE CROWN OF THE LOWER PIPE. WHERE THIS MINIMUM SEPARATION CANNOT BE MAINTAINED, THE CROSSING SHALL BE ARRANGED SO THAT THE STORM/WASTEWATER/RECLAIMED WATER PIPE JOINTS AND POTABLE WATER MAIN JOINTS ARE EQUIDISTANT FROM THE POINT OF CROSSING WITH NO LESS THAN TEN (10) FEET BETWEEN ANY TWO JOINTS, BOTH PIPES SHALL BE D.I.P., AND THE MINIMUM VERTICAL SEPARATION SHALL BE 6 INCHES. WHERE THERE IS NO ALTERNATIVE TO STORM/WASTEWATER/RECLAIMED WATER PIPES CROSSING OVER A POTABLE WATER MAIN, THE CRITERIA FOR MINIMUM 12" VERTICAL SEPARATION BETWEEN LINES AND JOINT ARRANGEMENT, AS STATED ABOVE, SHALL BE REQUIRED, AND BOTH PIPES SHALL BE D.I.P. IRRESPECTIVE OF SEPARATION. D.I.P. IS NOT REQUIRED FOR STORM SEWERS.
2. WHENEVER POSSIBLE MAINTAIN MIN. TEN (10) FEET HORIZONTAL DISTANCE (WALL TO WALL) BETWEEN POTABLE WATER MAIN AND STORM SEWER, WASTEWATER MAIN, OR FORCE MAIN (A MIN. 6' SEPARATION MAY BE APPROVED ON A CASE BY CASE BASIS). MAINTAIN MIN. THREE (3) FEET HORIZONTAL DISTANCE (WALL TO WALL) BETWEEN RECLAIMED WATER MAIN AND POTABLE WATER MAIN, STORM SEWER, WASTEWATER GRAVITY MAIN OR FORCE MAIN.
3. FORCE MAIN CROSSING POTABLE WATER MAIN OR RECLAIMED WATER MAIN SHALL BE LAID TO PROVIDE A MINIMUM VERTICAL DISTANCE OF TWELVE (12) INCHES BETWEEN THE OUTSIDE OF THE FORCE MAIN AND OUTSIDE OF THE POTABLE WATER MAIN OR RECLAIMED WATER MAIN WITH THE POTABLE WATER MAIN OR RECLAIMED WATER MAIN CROSSING OVER THE FORCE MAIN.
4. WASTEWATER LATERALS SHALL CROSS UNDER POTABLE WATER MAINS WITH A MIN. 12" VERTICAL SEPARATION WHENEVER POSSIBLE. WHERE THIS MINIMUM SEPARATION CANNOT BE MAINTAINED, A 20' SECTION OF DUCTILE IRON PIPE POTABLE WATER MAIN CENTERED ON THE CROSSING IS REQUIRED AND THE MINIMUM VERTICAL SEPARATION SHALL BE 6". WHERE THERE IS NO ALTERNATIVE TO A WASTEWATER LATERAL PIPE CROSSING OVER A POTABLE WATER MAIN, A MINIMUM 12" VERTICAL SEPARATION IS REQUIRED, THE LATERAL SHALL BE P.V.C. C-900 SDR18 OR BETTER, THE POTABLE WATER MAIN SHALL BE D.I.P. AND THE PIPE JOINTS SHALL BE EQUIDISTANT FROM THE POINT OF CROSSING.
5. POTABLE WATER SERVICE LINES SHALL CROSS OVER WASTEWATER MAINS WITH MIN. 12" VERTICAL SEPARATION. WHERE THIS MIN. SEPARATION CAN NOT BE MAINTAINED, THE WATER SERVICE SHALL BE ENCASED IN A MIN. 10' LONG CASING CENTERED OVER THE CROSSING WITH MIN. 6" VERTICAL SEPARATION.
6. WASTEWATER MAINS, WATER MAINS, STORM PIPES AND OTHER UTILITY PIPES SHALL CROSS PERPENDICULAR WHENEVER POSSIBLE.

POTABLE WATER, WASTEWATER MAIN AND STORM SEWER CONFLICT

18W

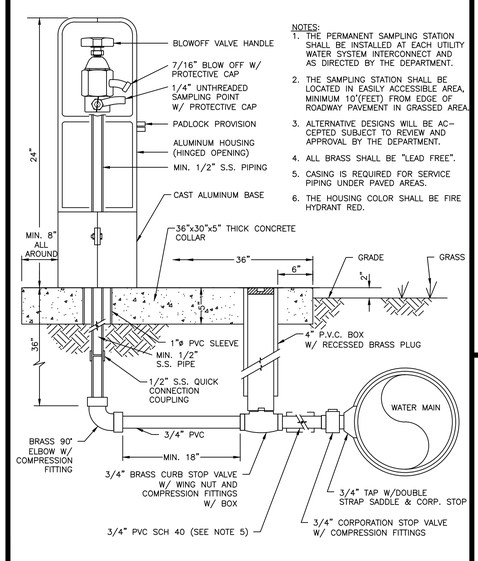

NOTES:

1. THE PERMANENT SAMPLING STATION SHALL BE INSTALLED AT EACH UTILITY WATER SYSTEM INTERCONNECT AND AS DIRECTED BY THE DEPARTMENT.
2. THE SAMPLING STATION SHALL BE LOCATED IN EASILY ACCESSIBLE AREA, MINIMUM 10'(FEET) FROM EDGE OF ROADWAY PAVEMENT IN GRASSED AREA.
3. ALTERNATIVE DESIGNS WILL BE ACCEPTED SUBJECT TO REVIEW AND APPROVAL BY THE DEPARTMENT.
4. ALL BRASS SHALL BE "LEAD FREE".
5. CASING IS REQUIRED FOR SERVICE PIPING UNDER PAVED AREAS.
6. THE HOUSING COLOR SHALL BE FIRE HYDRANT RED.

PERMANENT SAMPLING POINT

15W

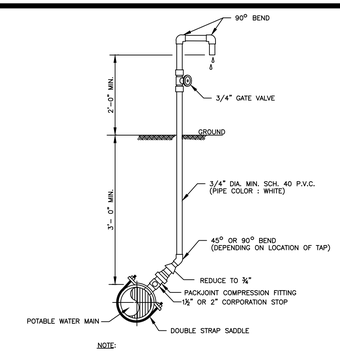

NOTE:

1. SAMPLE POINT SHOULD BE A SERVICE LINE OR FIRE HYDRANT IF POSSIBLE.
2. THREADED AREAS OF CORPORATION STOP SHALL BE SPIRAL WRAPPED WITH TWO WRAPS OF TEFLON TAPE
3. CLOSE AND CAP CORPORATION STOP AFTER SAMPLING COMPLETION.

POTABLE WATER MAIN TEMPORARY SAMPLING POINT

16W

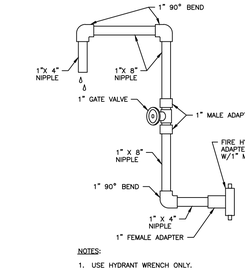

NOTES:

1. USE HYDRANT WRENCH ONLY.
2. ALL PIPES AND FITTINGS SCH. 40 P.V.C. (PIPE COLOR : WHITE).

POTABLE WATER MAIN FIRE HYDRANT SAMPLING POINT

17W

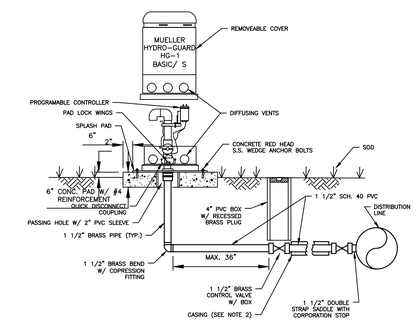

NOTES:

1. 12" MINIMUM CLEARANCE TO BE MAINTAINED BETWEEN AUTOMATIC FLUSHING SYSTEM PAD AND ANY OBSTRUCTION.
2. FOR INSTALLATION OF SERVICES UNDER DRIVEWAYS AND ROADWAYS, USE MIN. 4" DIAMETER BLACK IRON, PVC SCH 40, OR HDPE SDR 9 CASING. CASING SHALL EXTEND MIN. 24" BEYOND EDGE OF PAVEMENT. CASING TO BE SEALED WITH CEMENT. CASING SHALL BE COLOR-CODED BLACK, WHITE, BLUE, OR BLUE STRIPED.
3. AUTOMATIC FLUSHING ASSEMBLY TO BE INSTALLED AS CLOSE AS POSSIBLE TO THE WATER MAIN.
4. BEDDING (MIN. 4") AND COVER (MIN. 4") OVER SERVICE LINE OR CASING SHALL CONSIST OF FINE GRANULAR MATERIAL. UNSUITABLE IN-SITU MATERIALS SUCH AS MUCK, DEBRIS AND LARGER ROCKS SHALL BE REMOVED WITH 2" MAXIMUM SIZE.
5. ALL HARDWARE FOR FLANGED CONNECTIONS (BOLTS, ETC.) TO BE STAINLESS STEEL.
6. THREADED AREAS OF CORPORATION STOP AND OTHER FITTINGS SHALL BE SPIRAL WRAPPED WITH TWO (2) WRAPS OF TEFLON TAPE. ALL BRASS SHALL BE "LEAD FREE".
7. A 4" THICK COMPACTED 3/4" ROCK BASE IS REQUIRED. THE BASE SHALL EXTEND MINIMUM 12" BEYOND AUTOMATIC FLUSHING ASSEMBLY PAD PERIMETER.

AUTOMATIC FLUSHING ASSEMBLY (TYPE A)

43W

POTABLE WATER #2 STANDARD DETAILS

CONSULTANT:

IT'S THE LAW !
CALL 48 HOURS BEFORE YOU DIG
1-800-432-4770
SUNSHINE STATE ONE CALL OF FLORIDA, INC.
UTILITIES NOTIFICATION CENTER

DESIGNED BY: WUD
DRAWN BY: WUD CADD
CHECKED BY: A. GALICKI
APPROVED BY: WUD

Palm Beach County
Water Utilities Department
P.O.Box 16097
West Palm Beach, FL 33416-6097

Dec 08, 2016

PROJECT NO. 00-000

PROJECT NAME

PALM BEACH COUNTY FLORIDA

PALM BEACH COUNTY WATER UTILITIES DEPARTMENT
P.O. BOX 16097
WEST PALM BEACH, FL 33416
(561)493-6000

NO.	DATE	REVISION / REMARKS	BY
	FEB 2015	GENERAL REVISION	A.G.
	NOV 2015	GENERAL REVISION	

STD DETAILS

SHEET NUMBER 0 OF 0

SEAL

Drawing: W:\WUD STANDARD DETAILS\DTS-2015\WUD\WUD STD DTL SHEETS - CAD\WUD 2015 STD DTLS - POTABLE WATER (ACAD 2013).dwg\WUD PWS-2 - Last Modified: Thu, Dec 08, 2016 - 1:54pm